bürkert
FLUID CONTROL SYSTEMS

Radar level measuring device for hygienic applications

- For level measurement up to 20 m
- 4... 20 mA/Hart - 2 wires
- Adjustable via Display, key operation or PC-Tool with DTM
- ATEX approvals

Type 8138 can be combined with...

Type 8793
Process controller

Type 2103
Diaphragm valve

Type 8802-GD
Element
control valve system

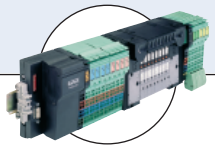

Type 8644
Valve islands

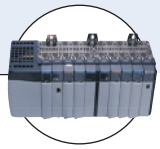

PLC

The Type 8138 is a non-contact radar level measuring device for continuous level measurement.

It is particularly suitable for use in small vessels that contain beverage liquids under sanitary process conditions.

Accuracy diagram

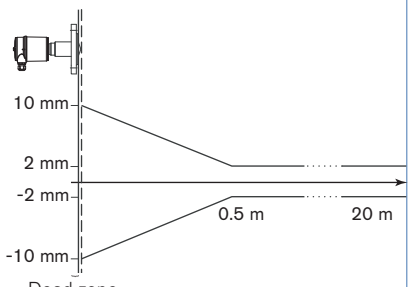

General data	
Materials	
Housing / Cover	PBT, Stainless steel 316L (1.4404) / PC
Seal ring / Ground terminal	NBR / Stainless steel 316Ti/316L (1.4571/1.4435)
Wetted parts	
Process connection / Antenna / Seal	Stainless steel 316L / TFM-PTFE / EPDM
Display*	LCD in full dot matrix (option)
Process connection	Clamp 2", DN25 connection adapted for GEA Tuchenhagen VARINLINE process connections, Flange DN50, DN100 DIN2501
Torque of the flange screws	60 Nm
Electrical connection	Cable glands M20 x 1.5
Measuring value	Distance between process connection and product surface
Min. dielectric figure	εr > 1.6
Dead zone	50 mm (from flange)
Measuring range	0.05 to 10 m (Clamp 2", DN25 connection or flange DN50 version) 0.05 to 20 m (flange DN100)
Process temperature	
with Clamp, flange connection	-40 to +200°C *(-40 to 392°F)*
with DN25 connection	-40 to +130°C*(-40 to 266°F)*
Vessel pressure	
with Clamp connection	-1 to 16 bar *(-14.51 to 232.16 PSI)* (-100 to 1600 kPa)
with DN25 connection	-1 to 10 bar *(-14.51 to 145.1 PSI)* (-100 to 1000 kPa)
with flange connection	according to flange rules
Vibration resistance	Mechanical vibrations with 4 g and 5... 100 Hz
Temperature coefficient	0.03%/10K (Average temperature coefficient of the zero signal - temperature error)
Resolution	max. 1 mm
Frequency	K-band (26 GHZ technology)
Interval	approx. 1 s
Beam angle at 3 dB	18° (Measuring range 0.05 to 10 m) 10° (Measuring range 0.05 to 20 m)
Adjustment time	> 1 s (dependent on the parameter adjustment)
Accuracy	± 2 mm (see diagram)

* to be ordered separately

DTS 1000105442 EN Version: J Status: RL (released | freigegeben | validé) printed: 24.10.2016

bürkert

Electrical data	
Operating voltage	14 - 36 V DC or 14 - 30 V DC (Ex ia instrument)
Permissible residual ripple	< 100 Hz: Uss < 1 V 100 Hz... 10 kHz: Uss < 10 mV
Output signal	4... 20 mA/HART
Resolution	1.6 µA
Fault signal	current output unchanged 20.5 mA, 22 mA or < 3.6 mA (selectable)
Current limitation	22 mA
Load	see load diagram
Damping (63% of the input variable)	0... 999 s, adjustable
Environment	
Ambient temperature	-40 to +80°C *(-40 to 176°F)* (operation and storage)
Relative humidity	80% max; without condensation
Standards and approvals	
Protection	IP66/IP67 with M20 x 1.5 gland mounted and tightened
Overvoltage category	III
Protection class	II
Standard	
EMC	EN61326
Security	EN61010-1
NAMUR	NE 21; NE 43
Approvals	ATEX[1] : EN60079-0; EN60079-11; EN60079-26 FDA
Specifications Ex	
- Protection	Categories 1/2G or 2G
- Certification	Ex ia IIC T6
Conformity specifications[1]	
Operating voltage Ui	30 V
Short circuit rating Ii	131 mA
Power limitation Pi	983 mW
Ambient temperature	-40 to +55°C *(-40 to 131°F)* (dependent on categories)
Internal capacity Ci	negligible
Internal inductivity Li	negligible

1) homologation certificate PTB 08 ATEX 2002X

Load diagram

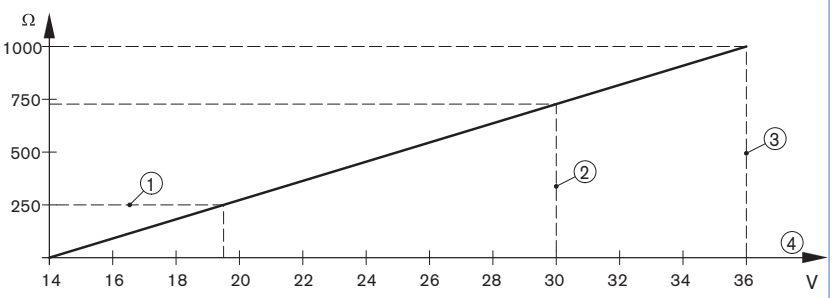

1 HART load
2 Voltage limit Ex ia instrument
3 Voltage limit non-Ex instrument
4 Operating voltage

Target applications

In highly purified water

The manufacture of products, which are either injected directly into the bloodstream, or administered as nose or eye drops, requires high purity water (WFI). The measuring device 8138 is especially suitable for level measurement in the WFI storage tank. The contactless measurement is unaffected by pressure or vacuum. The front flush antenna of the Type 8138 guarantees optimum CIP and SIP cleaning results. The antenna is PTFE encapsulated to protect it against highly ionised water.

In the stirring and preparation vessel

Processes like yoghurt production take place in controlled, highly sterile surroundings. They therefore place heavy demands on the cleanability of all parts that touch the medium.
The cleaning processes themselves are correspondingly thorough. Contamination with foreign bacteria would lead to spoilage of the entire batch.
The radar measuring device 8138 lends itself well for reliable level measurement here. The contactless measuring principle is not affected by the density changes in the yoghurt and the abrasiveness of the fruits. The front-flush antenna allows optimal CIP and SIP cleaning, is insensitive to high-pressure water jets and doesn't show thermal shock behaviour.

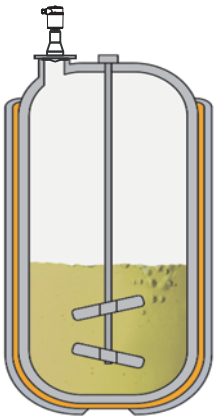

Principle of operation

The radar measuring device consists of an electronic housing, a process connection element the antenna and a sensor. The antenna emits short radar pulses with a duration of approximate 1 ns to the medium. These pulses are reflected by the medium surface and received by the antenna as echoes. Radar waves travel at the speed of light. The running time of the radar pulses from emission to reception is proportional to the distance and hence to the level. The determined level is converted into an output signal and transmitted as a measured value.

The measuring device can be adjusted with:

- the display/configuration module
- the suitable Bürkert DTM in conjunction with adjustment software according to the FDT/DTM standard, e.g. PACTware™ and PC
- a HART handheld

The entered parameters are generally saved in the measuring device Type 8138. Optionally, parameters may also be uploaded and downloaded with the display/configuration module or save in a file by using PACTware™/DTM

Set up with display/configuration module

The display/configuration module can be inserted into the measuring device and removed again at any time. It is not necessary to interrupt the power supply. The measuring device is adjusted via the four keys of the display/configuration module

Display/configuration module

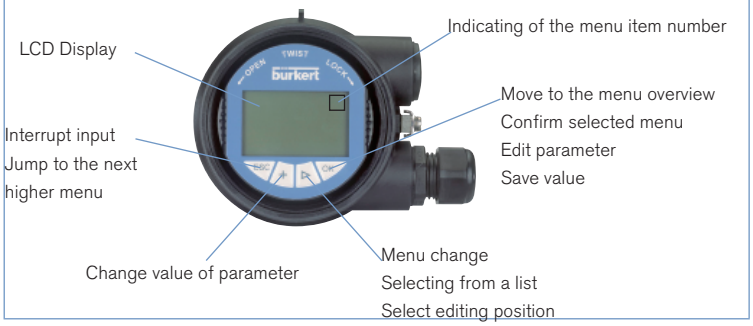

Set up with PACTware™/DTM and HART communication

The measuring device can be operated thanks to PACTware™, via HART communication. An interface adapter is necessary for the adjustment with PACTware™. For the setup of the Type 8138, the DTM in the actual version must be used. The basic version of DTM incl. PACTware™ is available as a free-of-charge download from the Internet at www.burkert.com.

Connecting the PC via HART

1. Measuring device 8138
2. HART-USB Modem
3. Resistance 250 Ohms

Necessary components:
- Measuring device 8138
- PC with PACTware™ and suitable Bürkert DTM
- HART-USB Modem
- Resistance approx. 250 Ohms
- Power supply unit

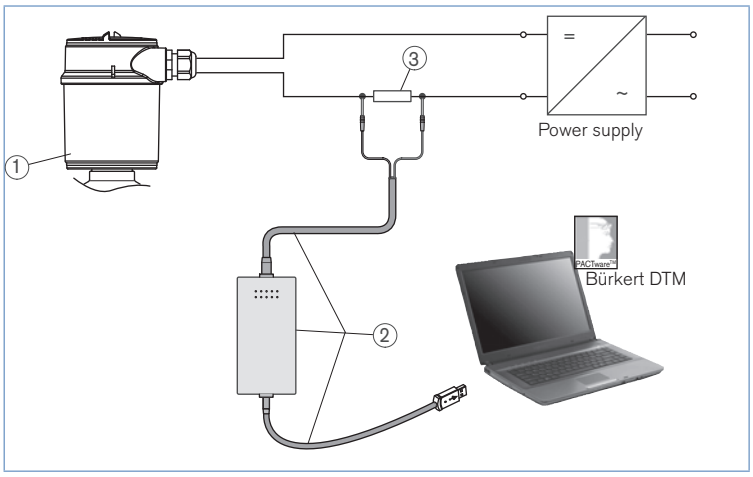

Dimensions [mm]

Clamp connection

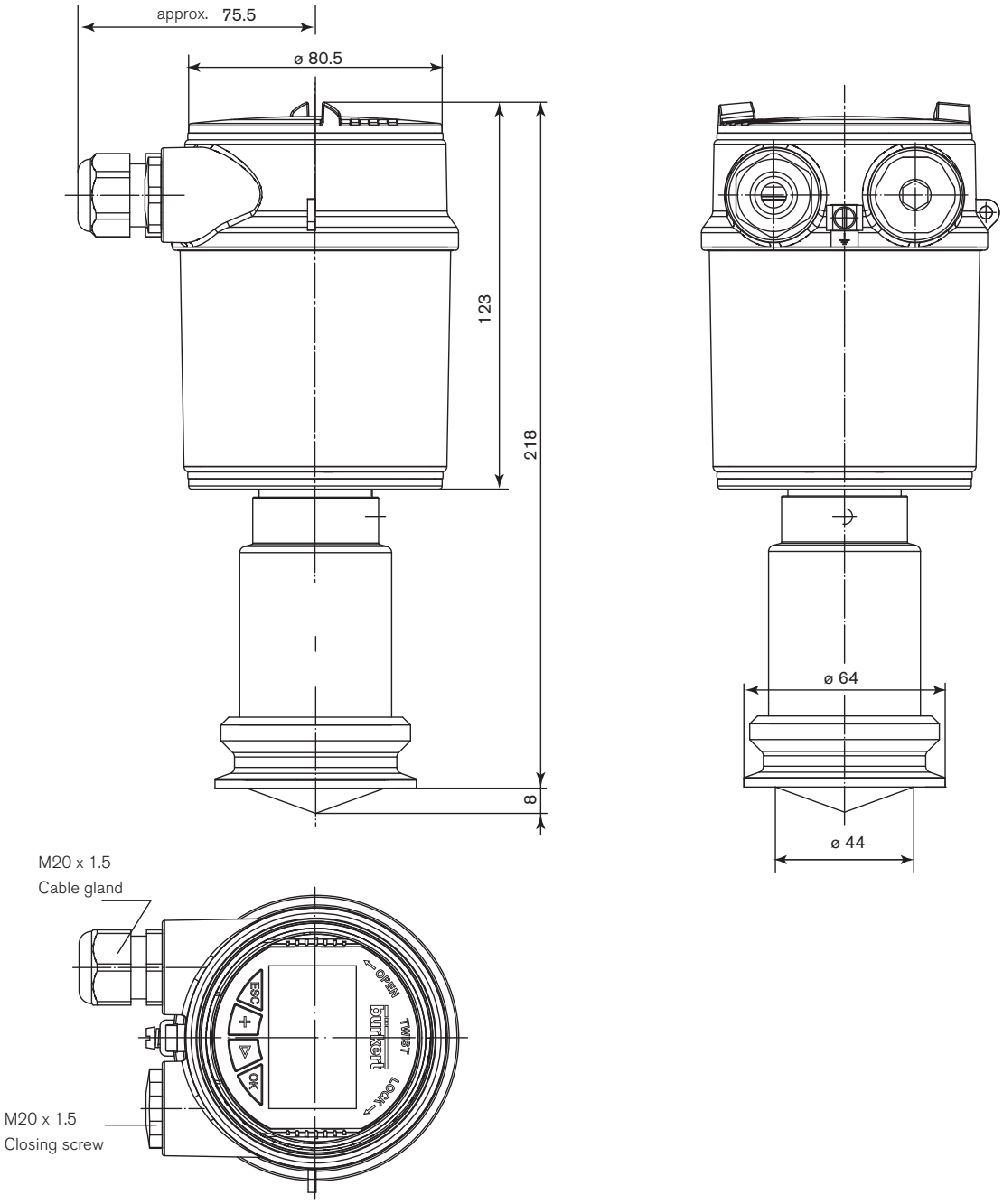

Dimensions [mm]

DN25 connection adapted for GEA Tuchenhagen VARINLINE process connections

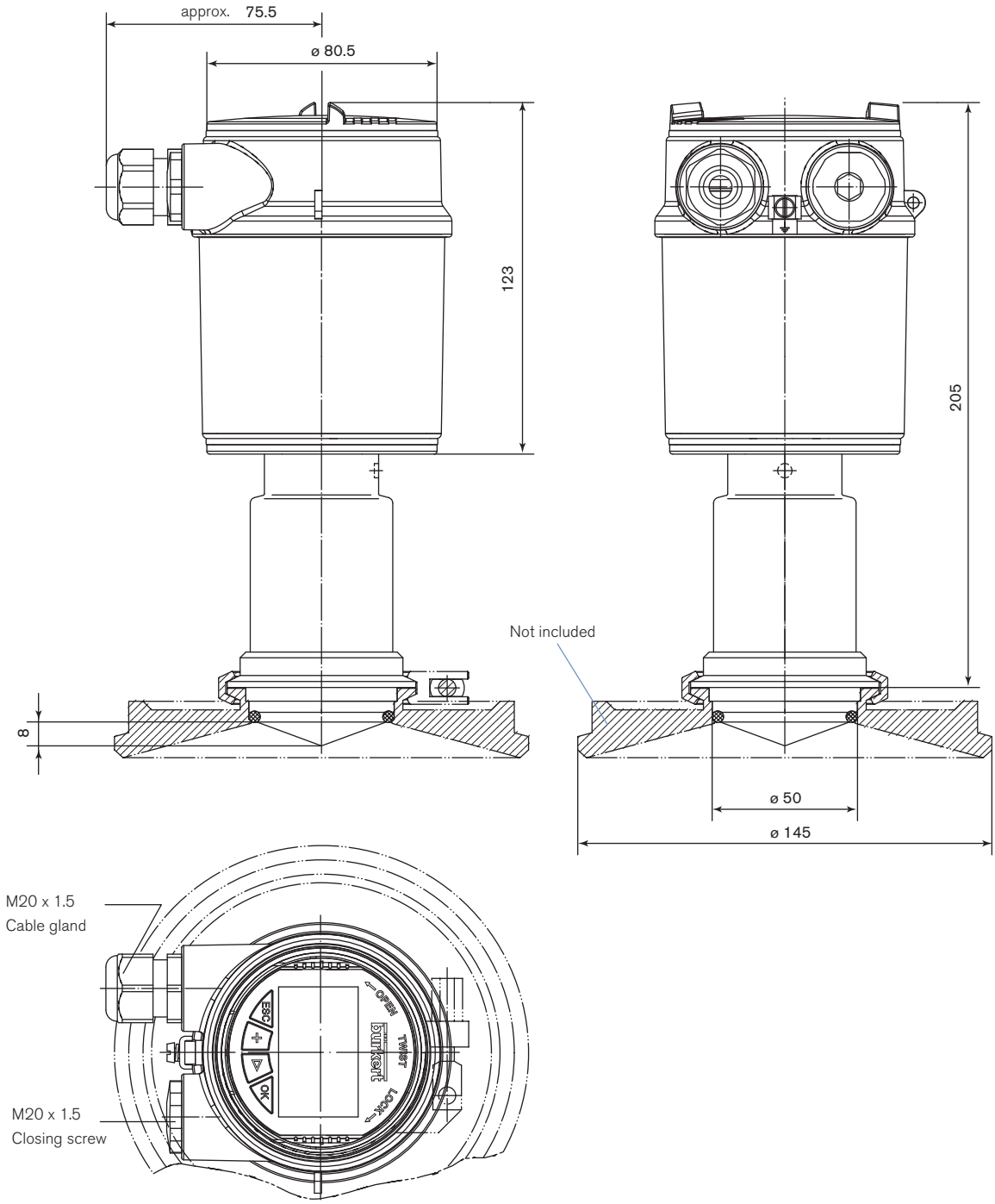

Dimensions [mm]

Flange connection

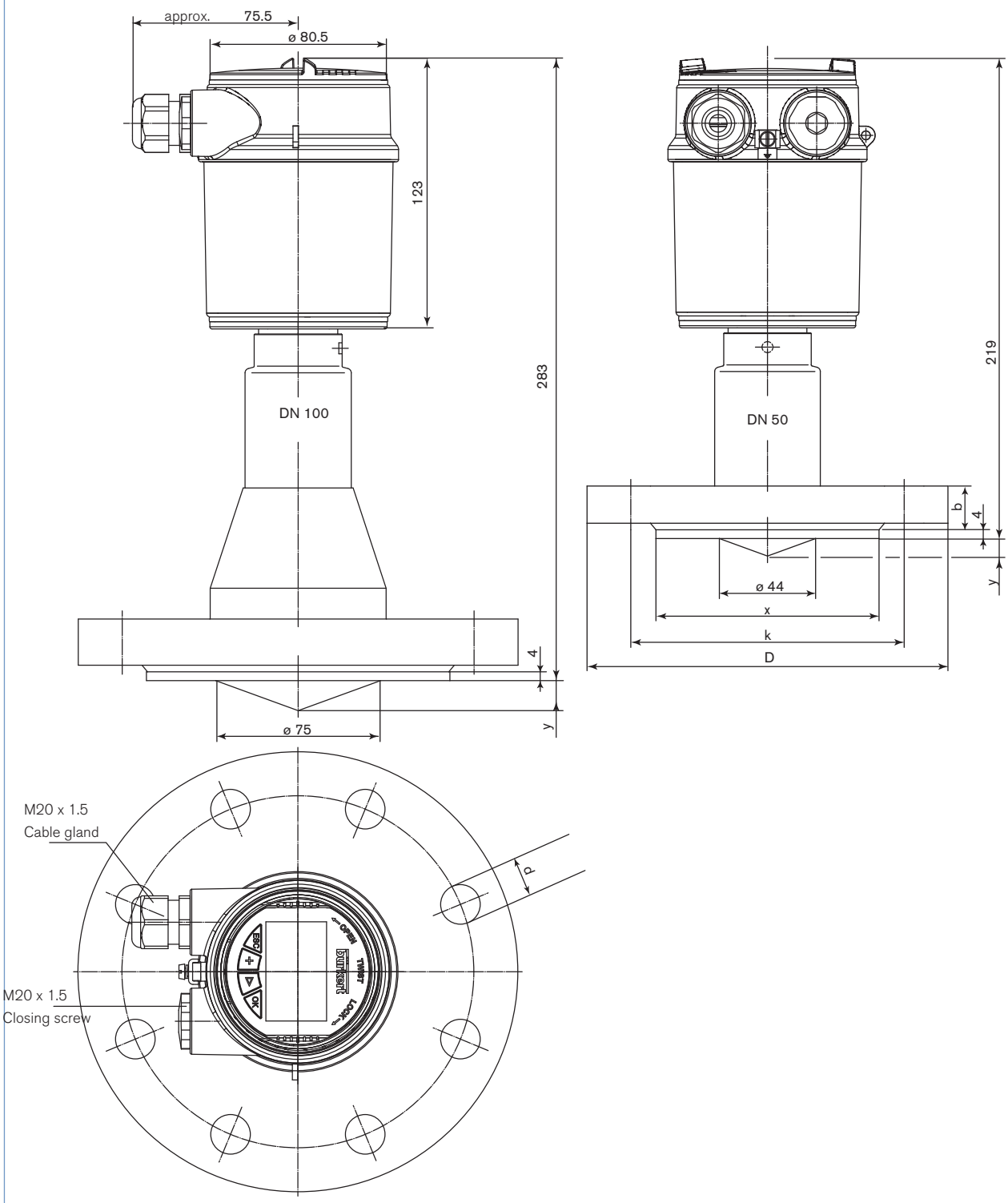

DN	D	b	k	d	x	y
50	Ø 165	20	Ø 125	4 x Ø 18	Ø 102	8.01
100	Ø 220	20	Ø 180	8 x Ø 18	Ø 158	13.65

Ordering chart for compact measuring device Type 8138

Specifications	Operating voltage	Output	Process connection	Electrical connection	Item no. without display/ configuration module
Standard version	14 - 36 V DC	4... 20 mA/HART (2 wires)	Clamp 2”	Cable gland M20 x 1.5	560 169
			DN25 connection adapted for GEA Tuchenhagen VARINLINE process connections	Cable gland M20 x 1.5	560 171
			Flange DN50 DIN2501 / 16 bar	Cable gland M20 x 1.5	560 173
			Flange DN100 DIN2501 / 16 bar	Cable gland M20 x 1.5	560 175
Ex version - ATEX approval	14 - 30 V DC	4... 20 mA/HART (2 wires)	Clamp 2”	Cable gland M20 x 1.5	560 170
			DN25 connection adapted for GEA Tuchenhagen VARINLINE process connections	Cable gland M20 x 1.5	560 172
			Flange DN50 DIN2501 / 16 bar	Cable gland M20 x 1.5	560 174
			Flange DN100 DIN2501 / 16 bar	Cable gland M20 x 1.5	560 176

Further versions on request

Please also use the “request for quotation” on page 8 for ordering a customized measuring device. go to page

Process connection

Flange	DN80 PN40 Form C DIN2501
	DN150 PN16 Form C DIN2501
	DN150 PN40 Form C DIN2501
	2” 150 lb RF; ANSI B16.5
	3” 150 lb RF; ANSI B16.5
	4” 150 lb RF; ANSI B16.5
	6” 150 lb RF; ANSI B16.5
Clamp	3” ; 4”

Ordering chart - accessories for measuring device Type 8138 (has to be ordered separately)

Specifications	Item no.
Set with 2 reductions M20 x 1.5/NPT½” + 2 neoprene flat seals for cable gland + 2 screw-plugs M20 x 1.5	551 782
Hart-USB Modem	560 177
Set with a display/configuration module, a transparent cover and a seal ring	559 279
Set with a transparent cover and a seal ring	561 006

DTS 1000105442 EN Version: J Status: RL (released | freigegeben | validé) printed: 24.10.2016

bürkert

Customized measuring device Type 8138 - request for quotation

Note
You can fill out the fields directly in the PDF file before printing out the form.

Please fill in and send to your local Bürkert Sales Centre* with your inquiry or order.

Company:	Contact person:
Customer No.:	Department:
Address:	Tel. / Fax.:
Postcode / Town:	E-mail:

Radar level measuring device 8138

Quantity: ☐ **Desired delivery date:** ☐

- **Antenna** ☐ Encapsulated horn (-40... 200°C) ☐ Hygienic encapsulated horn (-40... 130°C)
- **Process connection:**
  - **Clamp** ☐ 2" ☐ 2½" ☐ 3" ☐ 4"
  - **Bolting DIN 11851** ☐ DN50 PN16, ☐ DN65 PN16 ☐ DN80 PN16 ☐ DN100 PN16
  - **Hygienic fitting** ☐ with tension flange DN32 PN16 ☐ with compression nut F40 PN16
  - **Aseptic Bolting DIN 11864-2-A** ☐ DN50 (O-ring at vessel) ☐ DN60 (O-ring at vessel) ☐ DN80 (O-ring at vessel)
  - **SMS 1145** ☐ DN51 ☐ DN76
  - **Neuno Biocontrol** ☐ Size 50 PN16
  - **Flange** ☐ DN50 PN40, Form C, DIN2501 ☐ 2" 150 lb RF, ANSI B16.5
    ☐ DN80 PN40, Form C, DIN2501 ☐ 3" 150 lb RF, ANSI B16.5
    ☐ DN100 PN40, Form C, DIN2501 ☐ 4" 150 lb RF, ANSI B16.5
    ☐ DN150 PN40, Form C, DIN2501 ☐ 6" 150 lb RF, ANSI B16.5
    ☐ DN200 PN40, Form C, DIN2501 ☐ 8" 150 lb RF, ANSI B16.5
  - **DN25 connection** adapted for GEA Tuchenhagen VARINLINE process connections ☐ DN25... PN10
- **Display/configuration module** ☐ Yes ☐ No
- **ATEX approval** ☐ Yes ☐ No
- **FDA approval** ☐ Yes ☐ No

reset form

Interconnection possibilities with other Bürkert devices

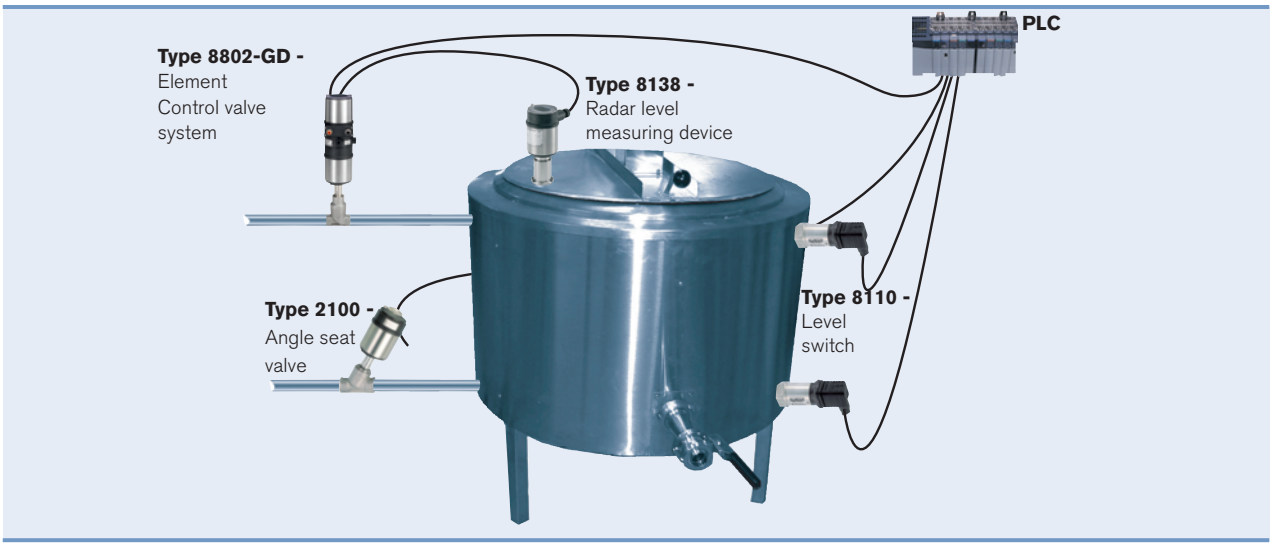

*To find your nearest Bürkert office, click on the orange box → www.burkert.com

In case of special application conditions, please consult for advice.

1412/10_EU-en_00895043

DTS 1000105442 EN Version: J Status: RL (released | freigegeben | validé) printed: 24.10.2016